SV - 8

Total No. of Pages : 6

Seat No.	

F. E. (All Branches) (Part - I) (Semester - I & II) (Revised) Examination, May - 2018

ENGINEERING GRAPHICS

Sub. Code : 59180

Day and Date : Tuesday, 15 - 05 - 2018 **Total Marks : 100**

Time : 09.30 a.m. to 01.30 p.m.

Instructions :
1) **All questions are compulsory.**
2) **Retain all construction lines.**
3) **Use both sides of drawing paper.**
4) **Assume suitable data if necessary and mention it clearly.**
5) **All dimensions are in mm.**

Q1) a) Solve any three:

i) Complete the projection of line AB if,

I) Its grade is +40% w.r.t. A

II) Its bearing is S 60°E w.r.t. A

III) Its FV length is 50 mm.

Determine its true length. Refer fig. 1-a. **[4]**

ii) Line CD is 45 mm long is parallel to AB and 25 mm away from it, complete the projection of line CD. Refer fig. 1-b. **[4]**

iii) Complete projection of line PQ, 30 mm long and perpendicular to AB. The point Q is on line AB. Refer fig. 1-c. **[4]**

iv) Find true shape of triangle PQR and measure its perimeter. Refer fig. 1-d. **[4]**

b) A thin circular plate of 60 mm diameter has a point A on its circumference in HRP. Draw its projection with its centre 45 mm in front of FRP and 25 mm above HRP and diameter makes an angle of 30° with FRP. **[13]**

Q2) A cone with 40 mm diameter and height 60 mm rests on HP such that the base is inclined at 35° to horizontal and top view of the axis is inclined at 45° to VP. Draw its projection if apex of cone is away from observer when viewed from front. **[13]**

P.T.O.

Q3) Solve any two :

a) A perfect gas relation between pressure P and volume V is isothermal expansion, given as PV = Constant. Draw a curve of isothermal expansion of enclosed volume of gas is 3 m^3 of gas corresponds to pressure of 5 kg/cm^2. **[6]**

b) Draw the involute of regular hexagon of side 20 mm. **[6]**

c) A stone is thrown from the top of the building 10m in height, in an upward direction. After reaching maximum height of 15m in corresponding horizontal travel of 5 m the stone starts descending down. Determine the position of the point ahead of building where stone falls on the ground. **[6]**

Q4) A following Fig. 11-(a) shows a view of Bracket. Draw the following views **[24]**

a) Sectional front view along sectional A-A in the direction 'X'

b) Top view

c) Left hand side view. Give necessary dimensions

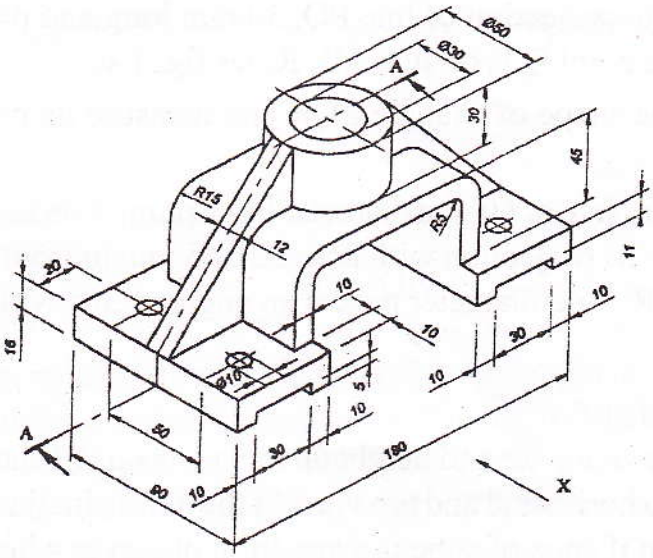

Fig. II-(a)

Q5) Solve any one. **[13]**

a) Fig shows the front and top views. Draw its isometric view.

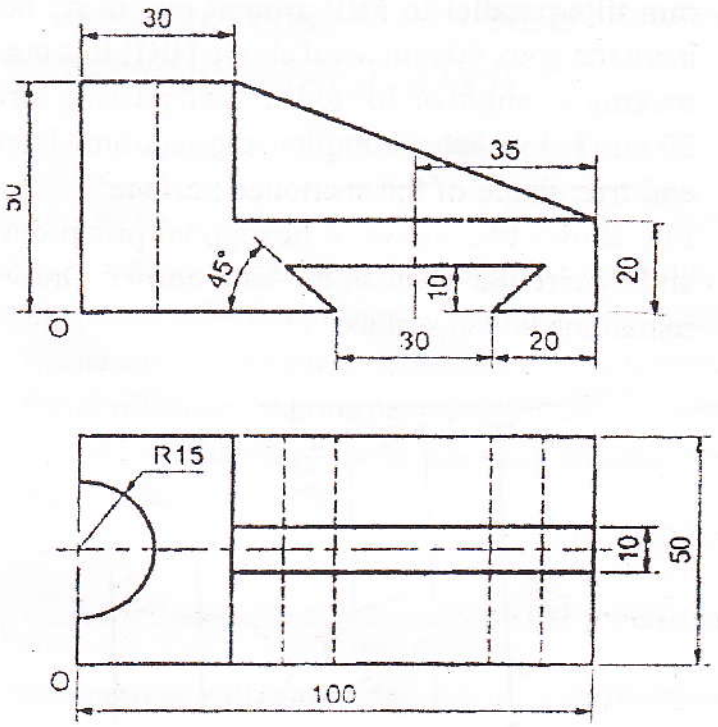

Fig. II-(b)

OR

b) Fig shows the views. Draw its isometric view. **[13]**

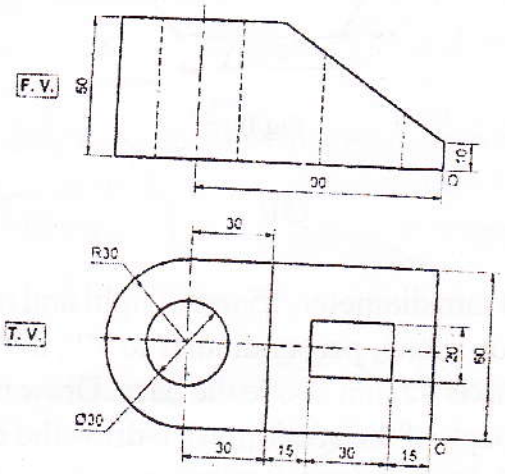

Fig. II-(b)

Q6) Solve any one.

a) Solve.

i) A square based pyramid with base side 35 mm and axis height 55 mm tilts parallel to FRP around one of its base edge on HRP to have the apex 40 mm level above HRP, it is cut by an vertical plane making an angle of 30° to FRP and passing through a point on axis 20 mm below apex, complete the sectional front view and top view and true shape of the sectioned surface. **[7]**

ii) Fig. shows two views of hexagonal prism cut by plane at the top and by circular plane at the base corner. Draw the development of remaining lateral surface. **[6]**

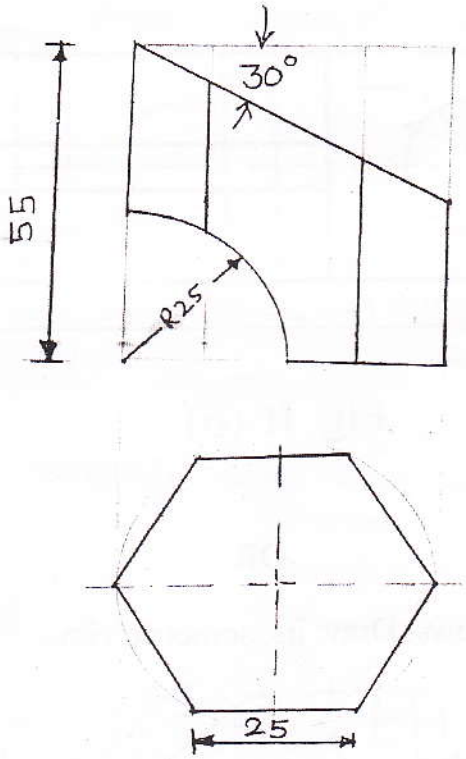

Fig II (c)

OR

b) Solve.

A cylinder of 50 mm diameter, 75 mm height and having its axis vertical, is cut by a section plane, perpendicular to VP, inclined at 45° to HP and intersecting the axis 40 mm above the base. Draw its front view, sectional top view, true shape of the section. Also draw the development of lateral surface of remaining portion of cylinder. **[13]**

● ● ●