SV-7

Seat No.	

Total No. of Pages : 4

F.E. (All Branches) (Semester - I & II) Examination, May - 2018
APPLIED MECHANICS
Sub. Code : 59185

Day and Date : Saturday, 12 - 05 - 2018 **Total Marks : 100**
Time : 10.00 a.m. to 1.00 p.m.

Instructions :
1) **All the questions are compulsory.**
2) **Figure to the right indicates maximum marks for the question.**
3) **Neat sketches should be drawn whenever necessary.**
4) **Use of Non-Programmable calculator is allowed.**
5) **Any missing data may be assumed suitably and clearly highlighted in the answer sheet.**

SECTION - I

Q1) a) State and explain force and its characteristics. **[4]**

b) For the force system acting on body OABC as shown in fig. (1), make calculations for the magnitude and direction of resultant force. Proceed to determine **[12]**

i) distance of resultant from point '0' and

ii) the point where resultant meets the X-axis and Y-axis.

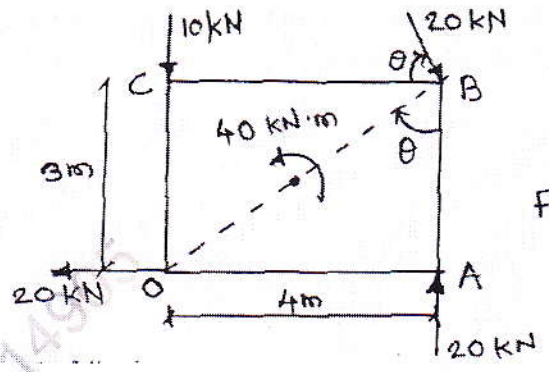

Fig.(1)

P.T.O.

Q2) a) Define the following terms:- **[4]**

i) Resultant
ii) Equilibrant
iii) Moment
iv) Couple

b) Two smooth spheres 'P' and 'Q' each of radius 25 cm and weighing 500 N, rest in a horizontal chanel having vertical walls in fig. 2 (b). If the distance between the walls is 90 cm, make calculations for pressure exerted on the walls and floor at point of contact 'A', 'B' and 'C'. **[14]**

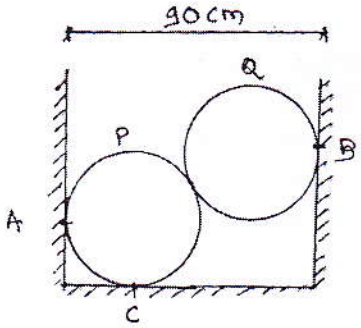

fig. 2 (b)

OR

b) A beam AB of 6m span is loaded as shown in fig. 2 (c). Determine the reactions at 'A' and 'B'. **[14]**

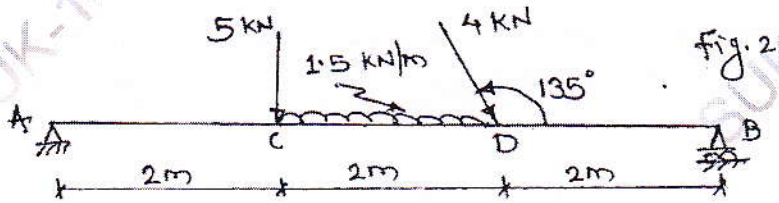

fig. 2(c)

Q3) a) Write note methods of analysis of truss. **[4]**

b) Determine the reactions and forces in each members of a simple triangle truss supporting two loads as shown in fig. (3). **[12]**

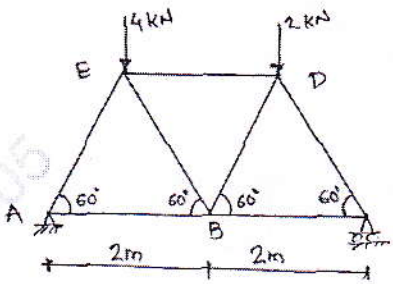

fig. (3)

SECTION - II

Q4) a) Discuss following terms:- **[4]**

i) Centroid

ii) Center of gravity

iii) Moment of inertia

iv) Radius of gyration

b) Determine the polar moment of inertia of the I-section shown in fig. (4). Also make calculations for the radius of gyration with respect to X-axis and Y-axis. **[12]**

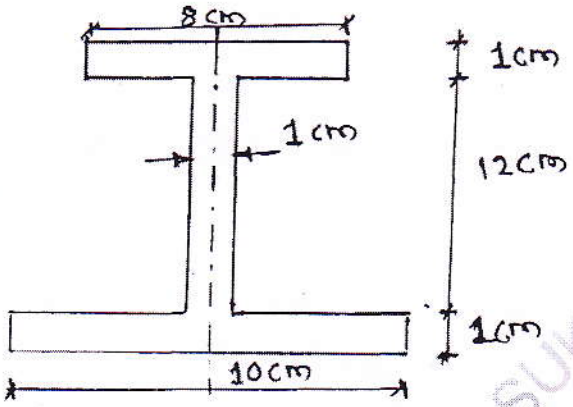

Q5) a) State and explain work-energy principle. **[4]**

b) A man weighing 750N stands on the floor of a lift. Determine the pressure exerted on the floor when

i) the lift moves upward with an acceleration of 2.5 m/s^2,

ii) the lift moves downward with an acceleration of 2.5 m/s^2 .

iii) If 900N pressure is to be exerted on the floor, then what acceleration the lift should move upward? Use D'Alembert's principle. **[14]**

OR

b) A train weighing 4000 kN has a frictional tractive resistance of 5N/kN of weight. Determine the steady pull which the locomotive must exert if the speed of the train is to be increased from 30 Km/Hr to 60 Km/Hr within a period of 1.5 minutes. **[14]**

Q6) a) Explain s - t, v - t and a-t diagrams. **[3]**

b) Explain types of impact. **[5]**

c) A ball of mass 30 kg moving with a velocity of 7m/s strikes directly on another ball of mass 12kg moving in opposite direction with velocity of 12 m/s. If the coefficient of restitution is 0.70, determine the velocity of each ball after impact. **[8]**

x x x

SUK-14905