Seat No.	

P-307

Total No. of Pages : 4

F.E. (All Branches) (Semester - I & II) (New Course) Examination, April - 2016
APPLIED MECHANICS
Sub. Code : 59185

Day and Date : Saturday, 30 - 04 - 2016 **Total Marks : 100**

Time : 10.30 a.m. to 1.30 p.m.

Instructions :
1) All questions are compulsory.
2) Figures to the right indicate maximum marks for the question.
3) Neat sketches should be drawn wherever necessary.
4) Use of Non-programmable calculator is allowed.
5) Any missing data may be assumed suitably & clearly highlighted in the answer sheets.

SECTION - I

Q1) a) State and explain parallelogram Law of Froces. [4]

b) A force system acting on a rigid body is as shown in figure. Find the magnitude direction of resultant and it's position with respect to point A. [12]

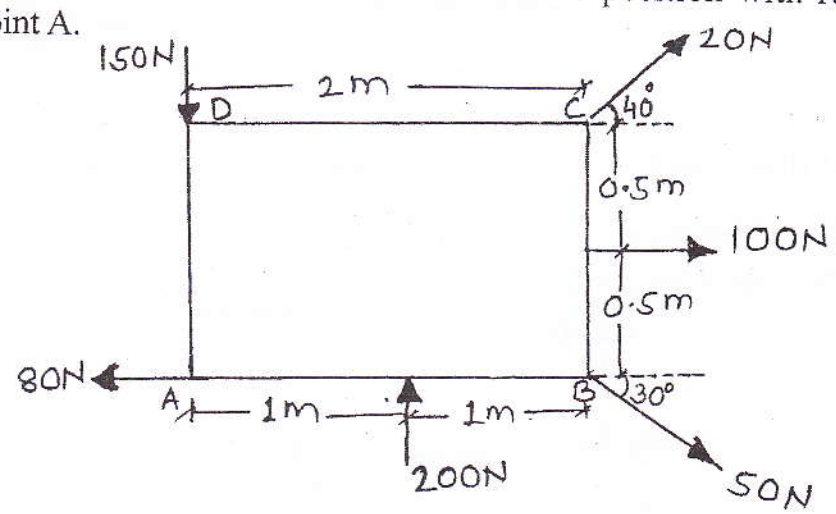

Q2) a) Write short note on Free body diagram. [5]

b) Two smooth cylinders A and B rest on a smooth inclined plane & supported by smooth vertical plane as shown in fig. Determine reactions at points of contact cylinder A weight 800N and is 0.4m in diameter, cylinder B weights 1500N and is 0.8m in diameter [13]

P.T.O.

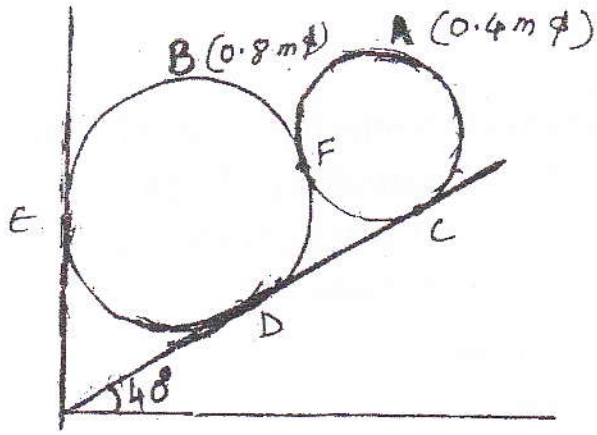

OR

b) Determine support reaction for the compound beam as shown in figure by using virtual work Method. **[13]**

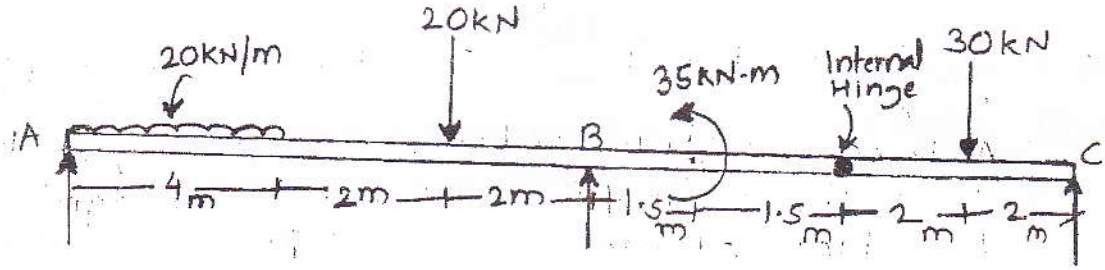

Q3) a) Differentiate between method of joint and Method of section. **[4]**

b) Determine the magnitude and nature of forces in the various members of the truss shown in fig. **[12]**

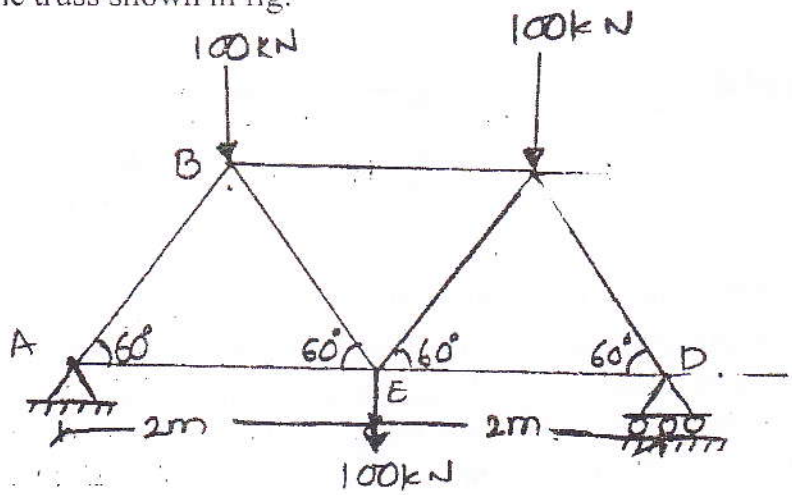

SECTION - II

Q4) a) Derive expression of M.I. of triangular section about the base of the triangle. [4]

b) Calculate moment of inertia of the shaded area about $x - x$ axis. Also compute radius of gyration about $x - x$ axis. (All dia. are in mm). [12]

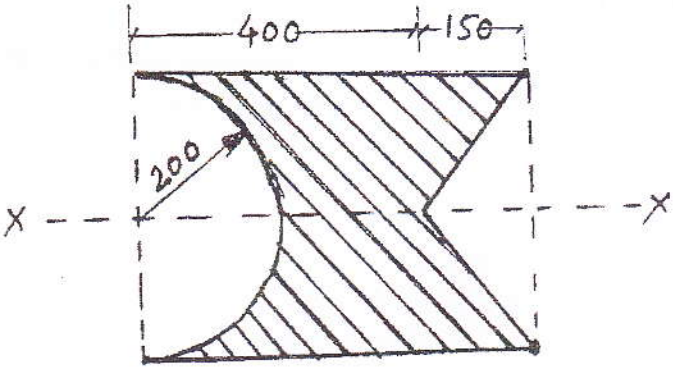

Q5) a) Write on: [6]

i) Mass moment of inertia.

ii) Impulse.

b) An elevator cage of a mine shaft weighing 8 KN, when empty, is lifted or lowered by means of wire rope. Once a man weighing 600N, entered it and lowered with uniform acceleration such that when a distance of 187.5m was covered, the velocity of the cage was 25m/sec. Determine the tension in the rope and the force exerted by the man on the floor of the cage. [12]

OR

b) A bullet weighing 0.3N is fired horizontally into a body weighing 100N which is suspended by a string 0.8m long. Due to this impact the body swings through an angle of 30°. Find the velocity of the bullet and the loss in the energy of the system. [12]

Q6) a) Define coefficient of restitution. [2]

b) Explain a-t, v-t and s-t diagrams for motion under constant acceleration. [4]

c) A ball of mass 20kg moving with a velocity of 5m/sec strikes directly another ball of mass 10 kg moving in the opposite direction with a velocity of 10m/sec. If the coefficient of restitution is equal to 0.82, then determine the velocity of each ball after impact. [10]