P-308

Total No. of Pages : 4

Seat No.	

F.E. (Part - I) (Semester - I) (Revised) Examination, May - 2016

ENGINEERING GRAPHICS

Sub. Code: 59180

Day and Date : Monday, 02 - 05 - 2016 **Total Marks : 100**

Time : 09.30 a.m. to 01.30 p.m.

Instructions : 1) **All questions are compulsory.**
2) **Retain all construction lines.**
3) **Use both sides of drawing paper.**
4) **Assume suitable data if necessary.**
5) **All dimensions are in mm.**

SECTION - I

Q1) A) Solve any three :

a) Complete the projection of line AB if; [4]

i) Its grade is +50% w.r.t. A

ii) Its bearing is S 45° E w.r.t. A

iii) Its TV length is 70 mm.

Determine its true length and angle with H.R.P. Refer fig. 1-a.

b) Complete projection of line CD parallel to AB and 20 mm away from it. Refer fig. 1-b. [4]

c) Line PQ is perpendicular to line MN. End P of line PQ is on MN. Complete the projection. Refer fig. 1-c. [4]

d) Find true shape of triangle ABC and measure its perimeter refer Fig.1-d. [4]

B) A 30°–60° set square rests on its shortest side which measures 60 mm and is inclined 60° to V.P. The plane of set square is inclined to horizontal plane such that the top view is isosceles triangle. Complete the projections. [13]

Q2) A pentagonal prism having base 30 mm side and axis 70 mm is resting on one of the corner of its base on H.P., such that longer edge containing that corner is inclined at 45° to H.P. and axis of the prism makes an angle of 30° to V.P. Draw the projection of prism. [13]

P.T.O.

Q3) Solve any two :

a) Draw an Archimedes Spiral of one and half convolutions the greatest and least radii being 115 mm and 15 mm. Also draw a tangent and a normal to the spiral at a point 65 mm from the pole. [6]

b) The focus of hyperbola is 65 mm from its directrix. Draw the curve if eccentricity is 3/2. Draw a normal and a tangent on the curve 40 mm from the directrix. [6]

c) Draw the involutes of regular hexagon of side 20 mm. [6]

SECTION - II

Q4) A following Fig. - II(a) shows a view of Bracket. Draw the following views : [24]

a) Sectional front view along sectional A-A in the direction 'X'

b) Top view

c) Right hand side view. Give necessary dimensions

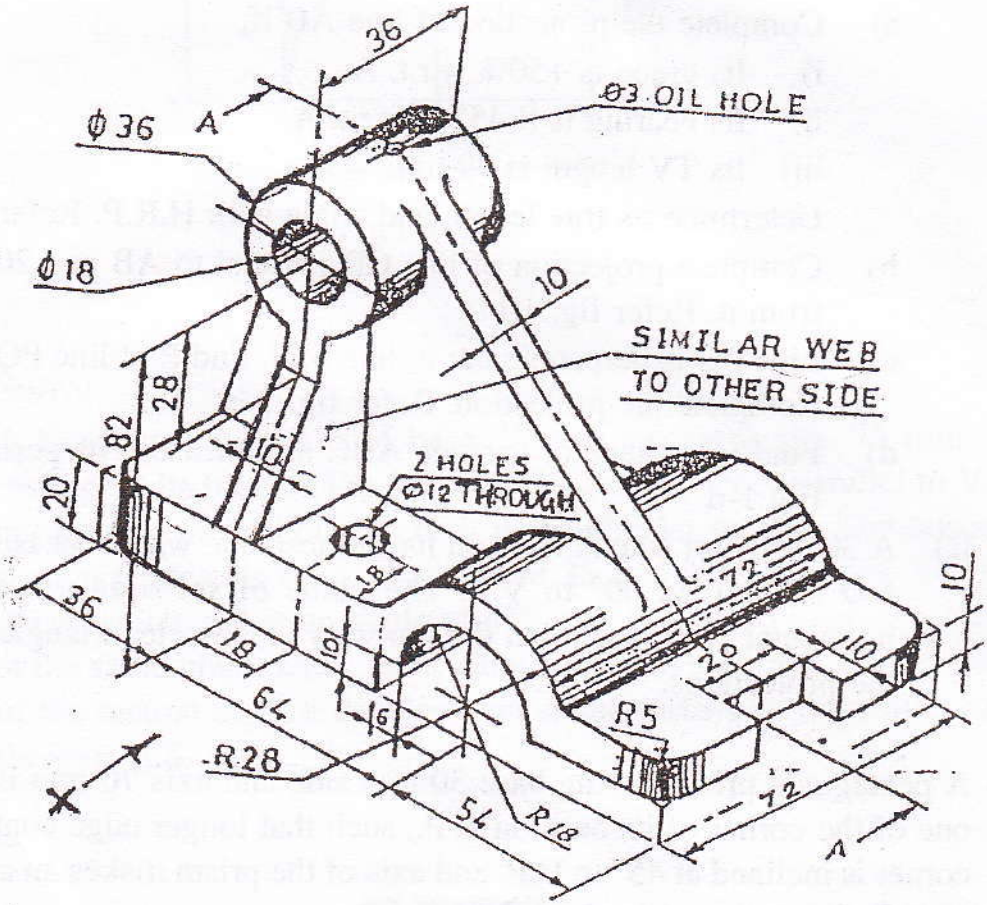

Fig. II-(a)

Q5) Solve any one : [13]

a) Figure shows the views. Draw its isometric view.

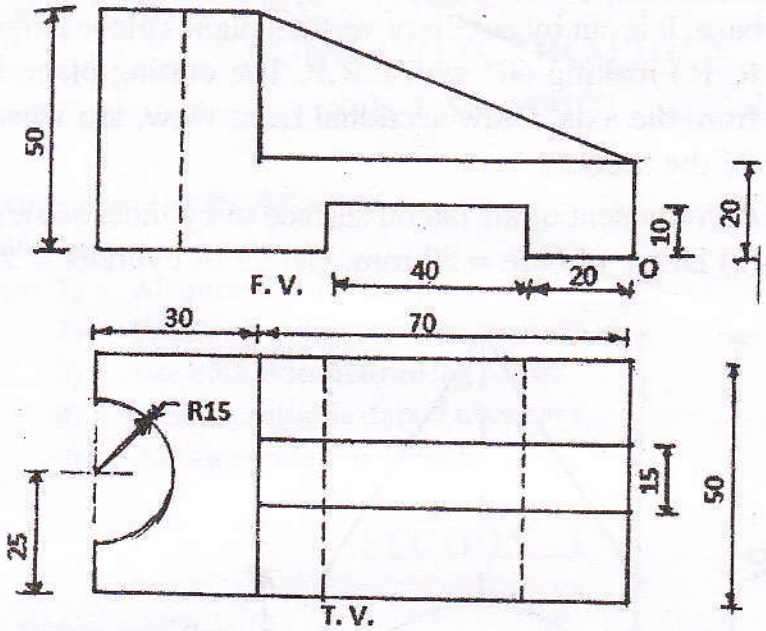

Fig. II-(b)

OR

b) Figure shows the views. Draw its isometric view.

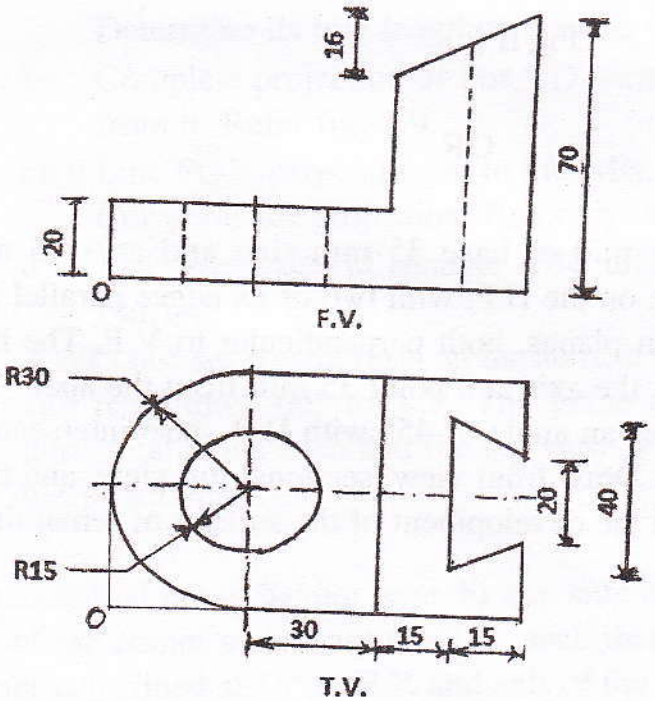

Fig. II-(b)

Q6) Solve any one :

A) Solve:

a) A cone of 60 mm base diameter and 70 mm height rests vertically on its base. It is cut by auxiliary vertical plane (plane perpendicular to H. R. P.) making 60° with F.R.P. The cutting plane is 10 mm away from the axis. Draw sectional front view, top view and true shape of the section. [7]

b) Draw development of the lateral surface of cylinder as shown in the fig II-(c) Diam. of base = 50 mm, Height of cylinder = 70 mm.[6]

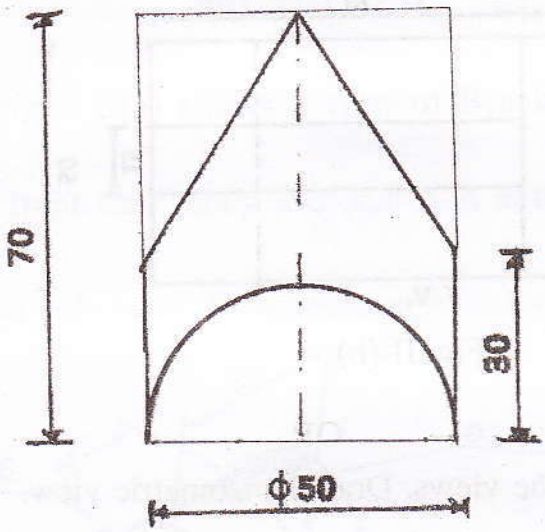

Fig II (c)

OR

B) Solve:

A hexagonal pyramid of base 35 mm side and axis 75 mm long, resting on its base on the H.P. with two of its edges parallel to V.P. is cut by two section planes, both perpendicular to V.P. The horizontal section plane cuts the axis at a point 35 mm from the apex. The other plane which makes an angle of 45° with H.P., also intersects the axis at the same point. Draw front view, sectional top view, and true shape of the section and the development of the surface of remaining part of the pyramid. [13]

□□□□

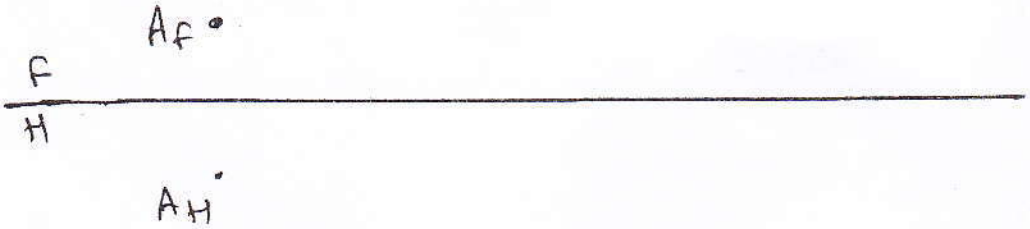

Q.1 A(i) fig-1-a

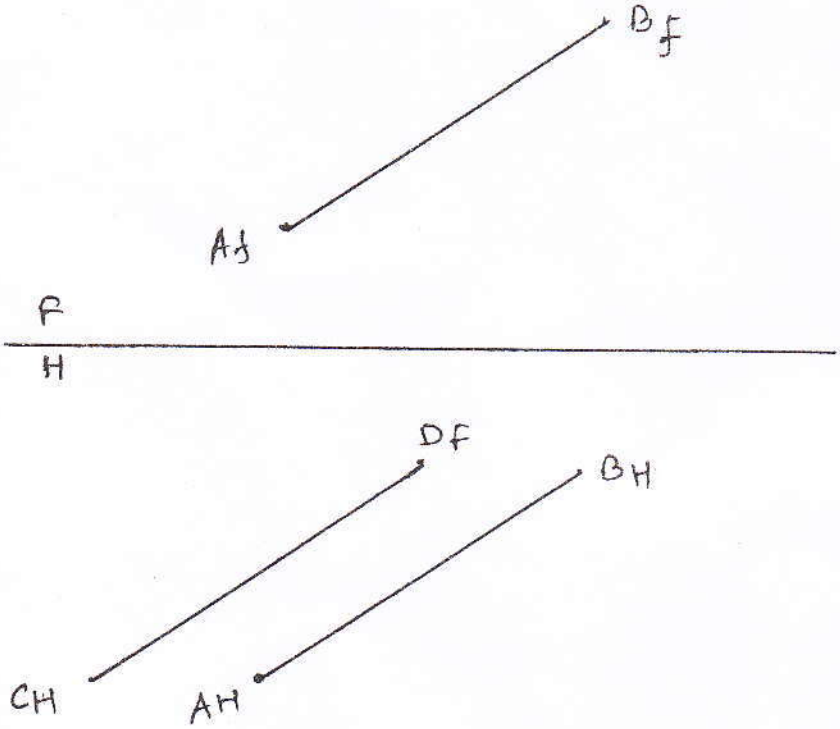

Q. 1A(ii) fig- 1-b

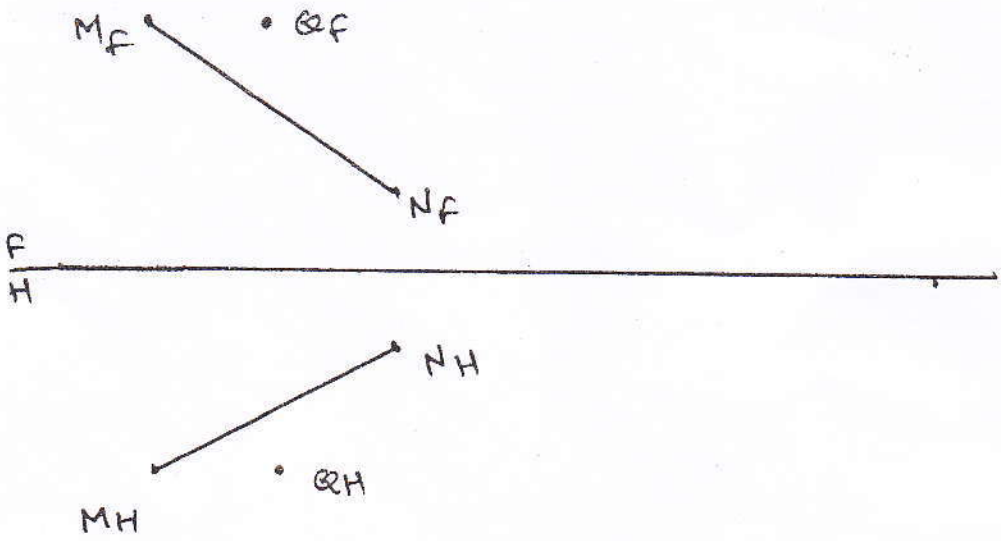

Q. 1 A (iii) fig. 1-C

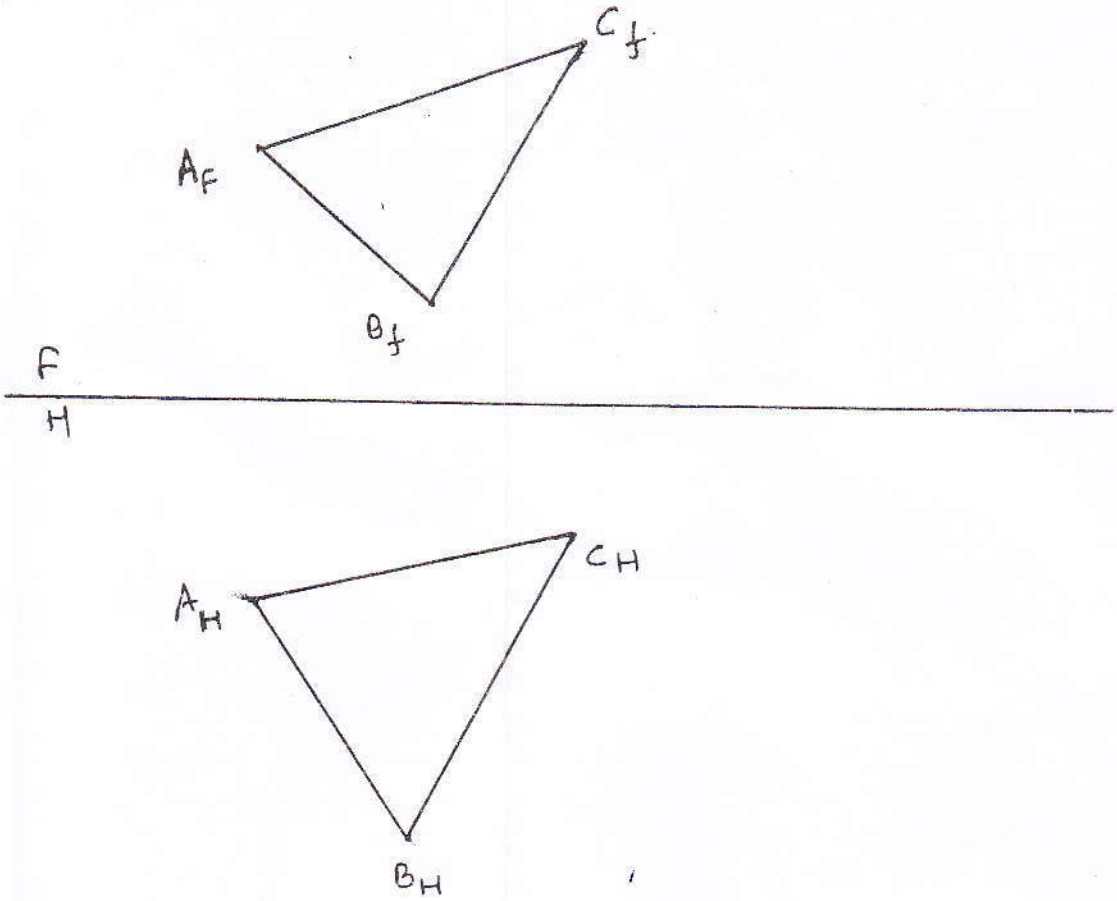

Q1.A.(iv) Fig. 1-d